D500122TC / D501522TC
Antioch®
Tub & Shower Trim Kit / Shower Only Trim Kit

SPECIFICATIONS

Features/Benefits

- 1.75 gpm (6.6 L/min) Maximum Flow Rate @80psi
- Includes Treysta™ Pressure Balance Ceramic Disc Cartridge
- Requires Treysta™ Rough-In Valve, G00GS500 Series (Horizontal Inputs) or G00GS520 Series (Vertical Inputs)
- Includes Single-Function Mono Round Showerhead, D460052
- 6” Metal Shower Arm
- Accommodates Standard, Back-to-Back, and Thin Wall Installations

Available Color/Finishes

Color	Description
	Chrome

Please see danze.com or current price list for available finishes.
Finish is defined by additional suffix.

Standards & Certifications

(Lever Handle)

Flow Rate

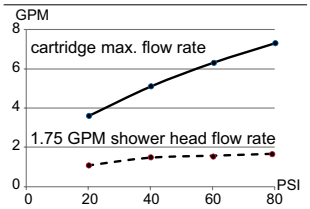

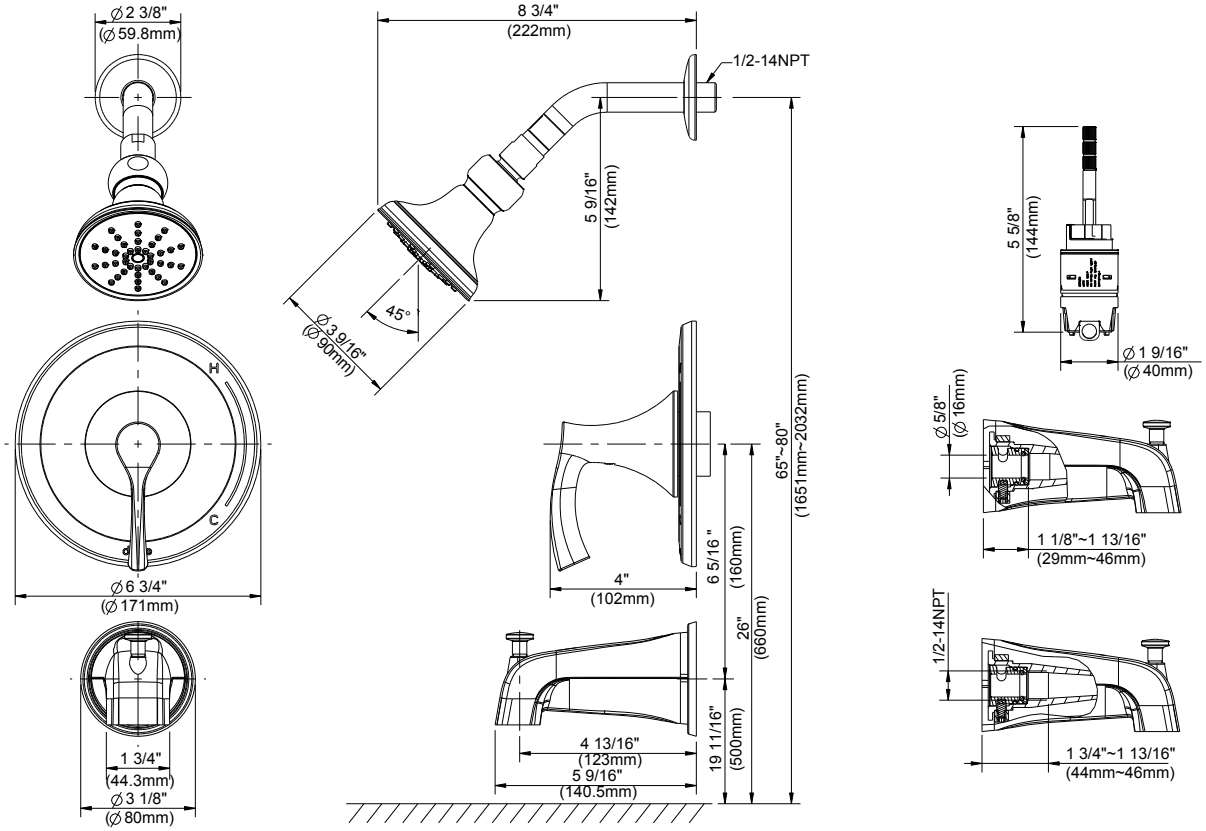

Submittal Information:

Name: _____ Contractor: _____

Location: _____ Contact #: _____

WARRANTY: Danze products are covered by a manufacturer’s lifetime limited warranty for manufacturing defects.